12TH INTERNATIONAL
BRICK/BLOCK
Masonry
CONFERENCE

12th IBMaC
MADRID-SPAIN
25-28 June 2000

Ade

THE UNIVERSAL MASONRY UNIT AND RIB REINFORCEMENT

Josep Mª Adell[1]

[1]Professor, Dr. Architect. UPM. Universidad Politécnica Madrid. DCTA. Architectural Building and Technology Department. ETSAM. Escuela Técnica Superior de Arquitectura.
Avda. Juan de Herrera no. 4. 28040 Madrid. Tel/Fax: 34 91 336 65 60. E-mail: ala@arquinex.es

ABSTRACT

Masonry units which allow vertical reinforcement have very large voids which when unreinforced lead to a large waste of mortar.
On the other hand, units which do not allow vertical reinforcement are either too solid or the perforations are too small to allow the same.
If it were possible to vertically reinforce masonry walls and particularly brickwork, the field of application of masonry work would broaden substantially and it would then be possible to consider prefabricated solutions built on site or factory-made which would reduce the cost of the work and increase building quality.
The term universal when applied to the design of new types of masonry unit refers to the fact that the said concept may be applied to all manner of masonry units worldwide, as all of these units would admit the said criteria.
The book "Arquitectura sin fisuras", which could loosely be translated as "Architecture without tears", written by the author of this article, considered the existing problem in this country regarding the pathology or symptoms of masonry work and the need to solve these in a simple manner by the possible vertical reinforcement of the masonry. This subsequently gave rise to the invention of the Ladriflor universal brick and the Allwall rib. The said publication also anticipated the design criteria of the Contemporary Façade which considered it essential to place horizontal joints below the slabs in enclosure walls in order to avoid cracking. As the enclosure walls were set between the floors of framed buildings this made them unstable under wind action, which subsequently required bracing or rib reinforcement.

Key words: *Universal Masonry Unit; Rib Reinforcement; Enclosure Wall; Plate Wall; Flower Brick.*

2. "THE UNIVERSAL UNIT" AND THE NEW METHOD FOR REINFORCING MASONRY

The vertical reinforcing of masonry through perforations in the units, following the normal technique or process of bricklaying is made possible by means of establishing a new method of reinforcement which is placed through lateral access channels in the units and/or walls, and the subsequent provision of sufficiently broad vertical perforations within the brick to allow the passage of this reinforcement.

The idea

Why can't masonry materials be reinforced?

How can we vertically reinforce masonry without changing the generic quality of a masonry material and without substantially affecting the same?

The idea was born from an attempt to solve the preceding questions by creating universal units which would be capable of housing the reinforcement without having unnecessarily large voids which would lead to the loss of mortar, and which could be reinforced while retaining their prismatic shape. This would then have to be a universal unit which could be both reinforced and contain mortar or be used without reinforcement and without filling with mortar.

In order to reinforce it would be necessary to create a new technique which allowed the housing of the reinforcement through lateral opening in the units on any of their unexposed faces, so that this would not affect the appearance of the exposed brickwork, and subsequently ease the masonry laying process (Fig. 1) (Fig. 2).

The idea of reinforcing through lateral opening in the unit came about in an attempt to avoid the construction difficulties which arise from the current methods of vertical reinforcement and which involve the threading of the units over the reinforcement or vice-versa, this being the case of reinforced concrete blocks. This latter process handicaps the raising of the wall by levels and implies the reduction of the rebars to distances of 1.5 m which subsequently requires multiple overlaps and does not allow the correct transmission of loads. the normal result is that the designer resorts to reinforced concrete instead of masonry.

In 1995, Adell patented the "integral masonry system with the possibility of three-dimensional reinforcement and the building components for the same", this patent being extended at an international level in 1996.

The innovation

In essence the innovation of the Integral Masonry system lies in the design of masonry units, regardless of material, which contain small perforations which may

Figure 1. Integral masonry system with the possibility of three-dimensional reinforcement and the building components for the same.
Figure 2. Theoretical examples of the new patented system.
Figure 3. Different forms of reinforcing though lateral access, according to the patented system.
Figure 4. Patented industrial modules of the Universal Clay Brick "Ladriflor TODOMURO" (ALLWALL Flower brick).

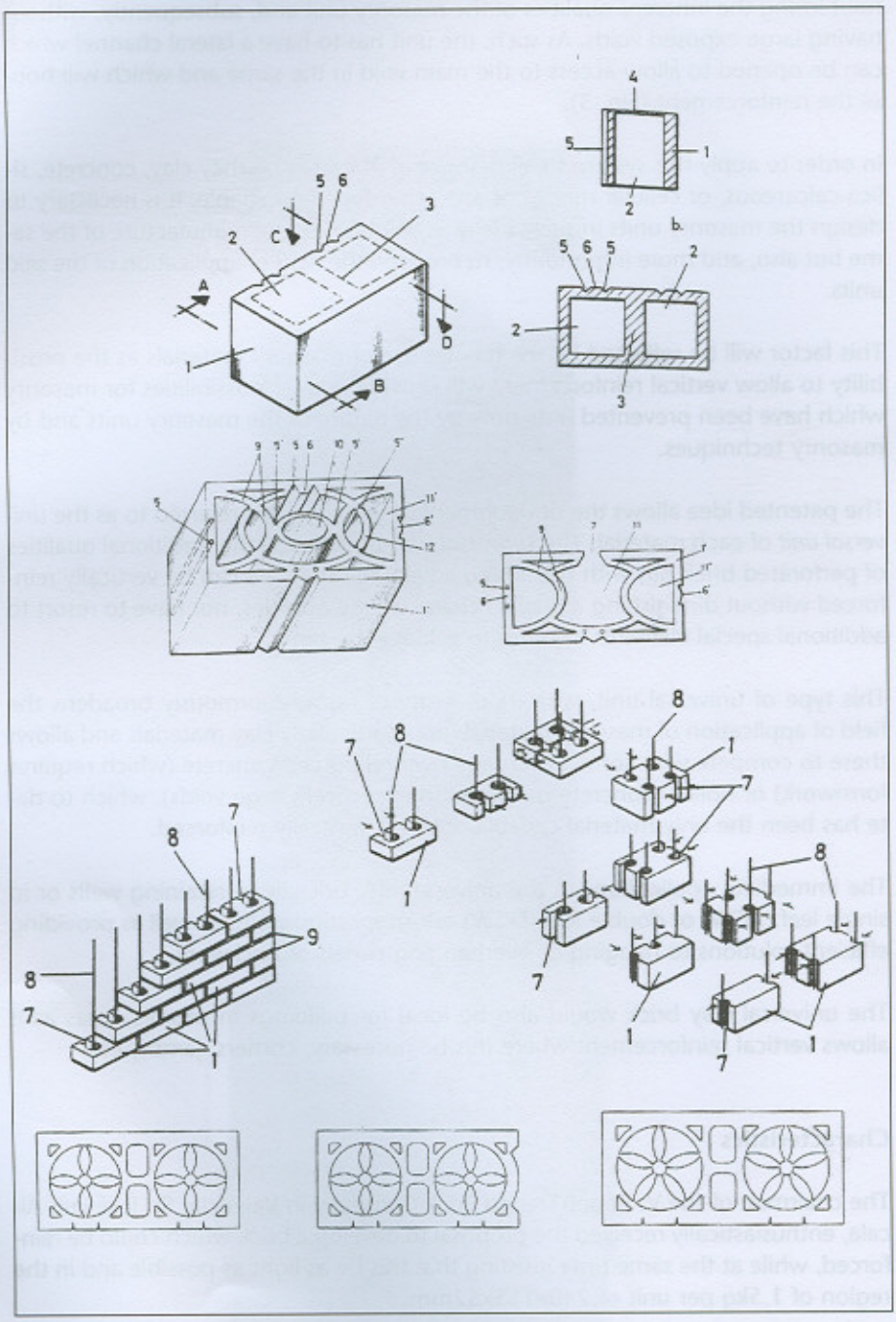

be enlarged to create larger voids in the units which may house vertical reinforcement which is passed through a lateral access channel in the same unit.

The reinforcing technique consists of passing the reinforcement through a lateral opening in the unit set on the unexposed face of the same (stretcher/header) without losing the inherent qualities of the masonry unit and, subsequently, without having large exposed voids. As such, the unit has to have a lateral channel which can be opened to allow access to the main void in the same and which will house the reinforcement (Fig. 3).

In order to apply this system to all manner of materials be they clay, concrete, silica-calcareous, or cellular mortar or any other type imaginable, it is necessary to design the masonry units in such a way as to optimise the manufacture of the same but also, and more importantly, to broaden the field of application of the said units.

This factor will be reflected by the greater use of masonry materials as the possibility to allow vertical reinforcement will provide greater possibilities for masonry which have been prevented until now by the nature of the masonry units and by masonry techniques.

The patented idea allows the development of what may be referred to as the *universal unit* of each material. The *Universal Clay Brick* has all the traditional qualities of perforated brick but with the added advantage that this can be vertically reinforced without diminishing any of its characteristic qualities, nor have to resort to additional special elements in order to achieve the same.

This type of universal unit, with its diversity of form, enormously broadens the field of application of masonry materials and particularly clay materials and allows these to compete with some advantage over reinforced concrete (which requires formwork) or hollow concrete blocks (with excessively large voids), which to date has been the only material capable of being vertically reinforced.

The immediate applications of the universal clay brick lie in retaining walls or in single leaf (ACW) or double leaf (DCW) self-supporting walls, as well as providing efficient solutions to hanging or overhanging panels of brickwork.

The universal clay brick would also be ideal for buildings in seismic areas as it allows vertical reinforcement where this be necessary; corners, jambs, etc.

Characteristics

The chairman of the V. Bonet-Trenco Brick Company in Valencia, Sr. José Luis Alcala, enthusiastically received the proposal to develop a brick which could be reinforced, while at the same time insisting that this be as light as possible and in the region of 1.5kg per unit of 240x115x52mm.

From the various design proposals the company selected a brick on the basis of its ease of manufacture, the said brick soon becoming popularly known as the *flower brick* as the clay mass within the voids was arranged in the form of petals, and there being two *flowers* set in the bed of the perforated unit.

Various industrial models have been patented with floral forms containing different numbers of *petals* in accordance with the size of the unit and in order to prevent excessively large voids and the ensuing loss of mortar (Fig. 4.a, b, c)

The manufacturers soon adopted the name of the *Ladriflor* or *Flower Brick* and later added the name of TODOMURO or ALLWALL to denote the field of application, this being one that does not refer to aesthetics or the use of a unit solely for reinforcement, but to the fact that this may be employed in all types of masonry walls.

As such, a brick was obtained with the minimum admissible weight and of the desired technical characteristics to be employed in all types of building, and where the perforations could, if so required, be opened simply with a bricklayer's trowel (Fig. 5. a, b).

This unit could be used in any unreinforced wall, including those with exposed joints, this being made possible by the special form of the header which contains a recessed moulding to allow internal mortar joints (fig 6. a, b, c).

After the work carried out with V.Bonet Trenco, Sr. Jose Malpesa, the General Manager of the Malpesa S.A Brickworks in Bailén took the reigns of the development of the *ALLWALL Flower Brick*.

At the outset it was established with MALPESA that the ensuing object was not necessarily to develop a brick which was as close to the minimum authorised weight as possible, and which could always be developed at a later stage, but instead to produce a quality product even if this implied an increase in weight and, logically, in the thickness of the Flower Brick walls. This always providing that the stipulated technical criteria was met and that the unit be around 1.9 kg and 240x115 x 52mm (Fig. 7).

In order to present the new brick at trade fairs, a special steel structure was designed in the form of an umbrella which allowed the suspension of hanging walls at an elevated height which meant that the structure could be seen from below, in order to appreciate the technical and formal advantages of the ALLWALL Flower Brick.

In the CONSTRUMAT '99 Building Trade Fair, MALPESA exhibited a stand of hanging panels of prefabricated brickwork, 1.5m long by 60cm high and half brick thick, which was transported by lorry and held at its four corners by void reinforcement housed in the Ladriflor perforations. The walls logically contained the corresponding Murfor truss type bed joint reinforcement and LHK angles to prevent the falling of the lower course of brickwork (fig. 8 a,b).

Figure 5. a) First Ladriflor Flower Brick, 240x115x52mm. Weight 1.5kg by V.Bonet-Trenco; b) clay model.
Figure 6. a) Mortaring of header joint; b) Laying of Ladriflor; c) Tapping of header joints.
Figure 7. Second Ladriflor of 240x115x52mm and 1.9kg by the Malpesa Brick Company.
Figure 8. Umbrella of hanging brick panels at Construmat '99; a) Design plan; b) General view.

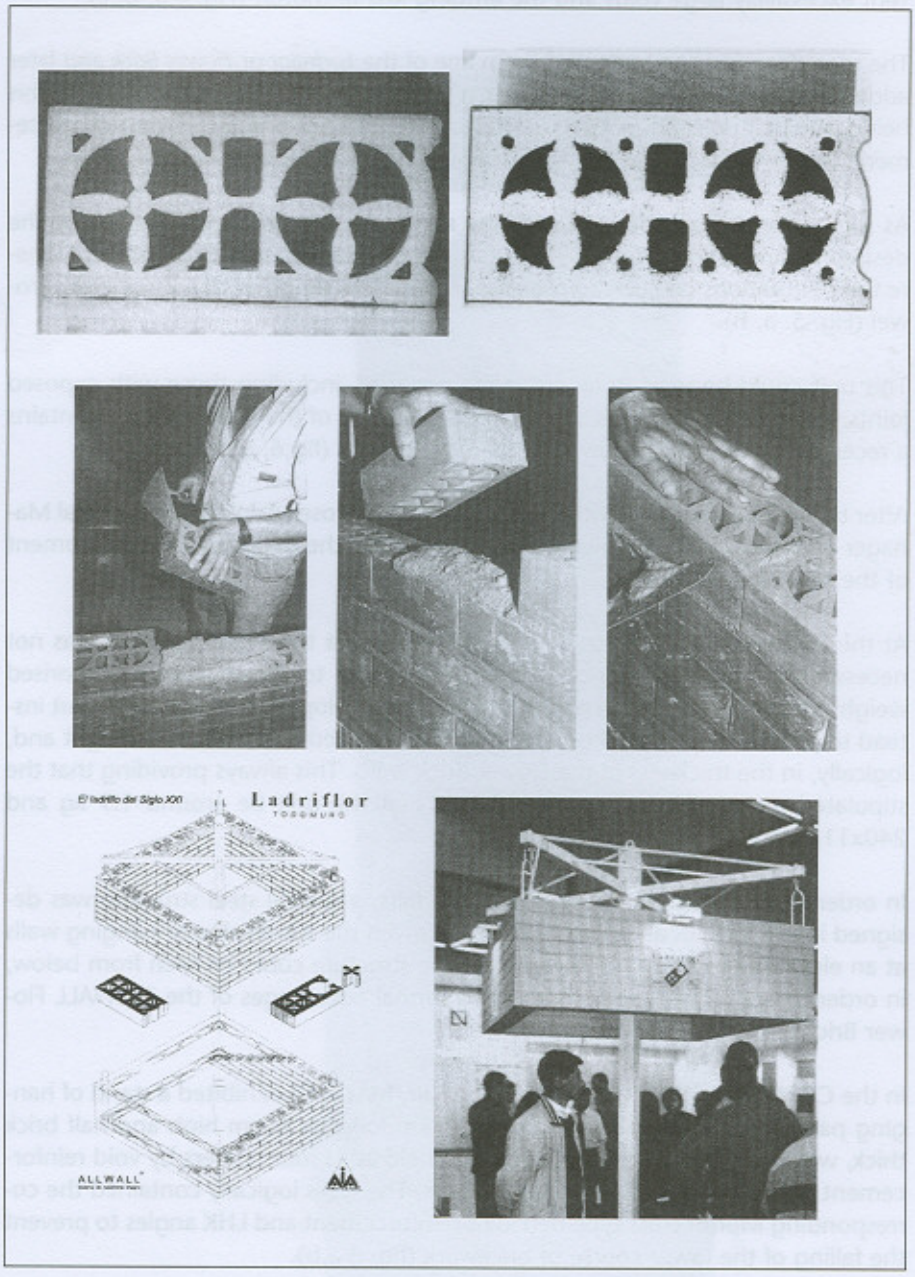

In the CEVISAMA Trade Fair in 1999 in Valencia, MALPESA presented the second version of the ALLWALL Flower brick, which was somewhat heavier then the first. The Glass Test Centre awarded MALPESA with an Honorary Medal for the ALL-WALL Flower Brick (fig. 9).

As a result of the great initial acceptance of the Flower brick unit and it building possibilities, this is now undergoing commercialisation with invitations being extended to all those Spanish brick manufacturers who so desire.

As there are many specific industrial models which respond to the characteristics established in the patent, various models have logically been developed in accordance with the characteristics or field of application of different masonry materials.

In a similar manner, different industrial models have been developed on variants of the patent in order to allow the vertical reinforcement of lightweight clay blocks (Fig. 10) of hollow concrete blocks (Fig. 11), among other types and materials.

Advantages and disadvantages

- The universal unit has the advantage of broadening the field of application of masonry materials which require vertical reinforcement. The said advantage allows the creation of new applications which were not possible to date.
- The inherent advantage of modernising the field of application.
- The initial disadvantages lie in the fact that the masonry materials already on the market have to redesigned and, as such, these materials have to go through a suitable manufacturing adjustment period until a perfect product is obtained.
- There are inconveniences in opening new fields of application.
- The fact that there are universal units which are capable of being reinforced with void reinforcement and anchors, creates a new and trustworthy integral masonry system.

3. VERTICAL RIB REINFORCEMENT OR VOID REINFORCEMENT

In order to solve the symptomatic problem of Spanish enclosure walls it is possible to vertically reinforce the clay masonry units, however, there is the problem that there is a lack of suitable reinforcement which would ensure correct placing by the bricklayer or which would be in accordance with design criteria.

The idea

In answer to the problems of Spanish enclosure walls and in order to comply with the requirements of ASEMAS (The Architects' Mutual Insurance Association), which demand that horizontal movement joints to be placed below the floor slabs, there arose the possibility that vertical ribs could be employed to protect the brickwork against wind action.

If vertical ribs were then required, would it not be possible for the brickwork to incorporate these vertical reinforcements within the skin of the brickwork without having to resort to supplementary devices.

From the evidence provided by calculation, which established that bracing or reinforcement must be installed, it was then considered that the incorporation of ribs within the brickwork would serve a double purpose: it would avoid the occupation of space within the cavity and/or the inner leaf, and at the same time provide new possibilities for the masonry.

The idea to place reinforcement, ribs or profiles within the masonry is now possible as a result of the invention of the universal units.

The ASEMAS report on facing walls (FFC001) titled "Exposed brick leaf enclosure walls", drawn up by this author in 1997, establishes the need for the said ribs and the possibility of incorporating these within the brickwork for the aforementioned reasons. At the time in question this was an international innovation and was presented as such at the Bekaert stand at the CONSTRUMAT '97 Building Trade Fair (Fig. 16 a, b).

The author decided to patent the "Integral Masonry System for wall reinforcement" in 1997 on his own account due to the lack of specific interest by manufacturers in the sector. This patent being extended internationally in 1998.

*The innovation

The vertical rib reinforcement or prefabricated void reinforcement provides vertical reinforcement of masonry by means of lateral access through the units which does not affect their exposed faces and which allows the precise positioning of the reinforcing bars, wires etc., with regards to the external faces of the masonry (facing and rear) in order to obtain the maximum possible inertia of the wall (Fig. 12).

The masonry ribs will be suitably prefabricated to obtain the said objective (Fig. 13).

The void ribs open new fields of application in masonry, particularly when combined with the previously described universal units and, more specifically, the universal clay brick (ALLWALL Flower Brick).

Figure 9. The ALLWALL Flower brick - awarded a prize at the Cevisama '99 Trade Fair for the utility of its perforations.
Figure 10. Universal Lightweight Clay Block proposed to Hispalyt for commercialisation.
Figure 11. Universal Hollow Concrete Block.
Figure 12. Rib reinforcement ready to be placed laterally in the wall.
Figure 13. Various forms of rib reinforcement.
Figure 14. Truss-type rib reinforcement with sliding lateral anchor.

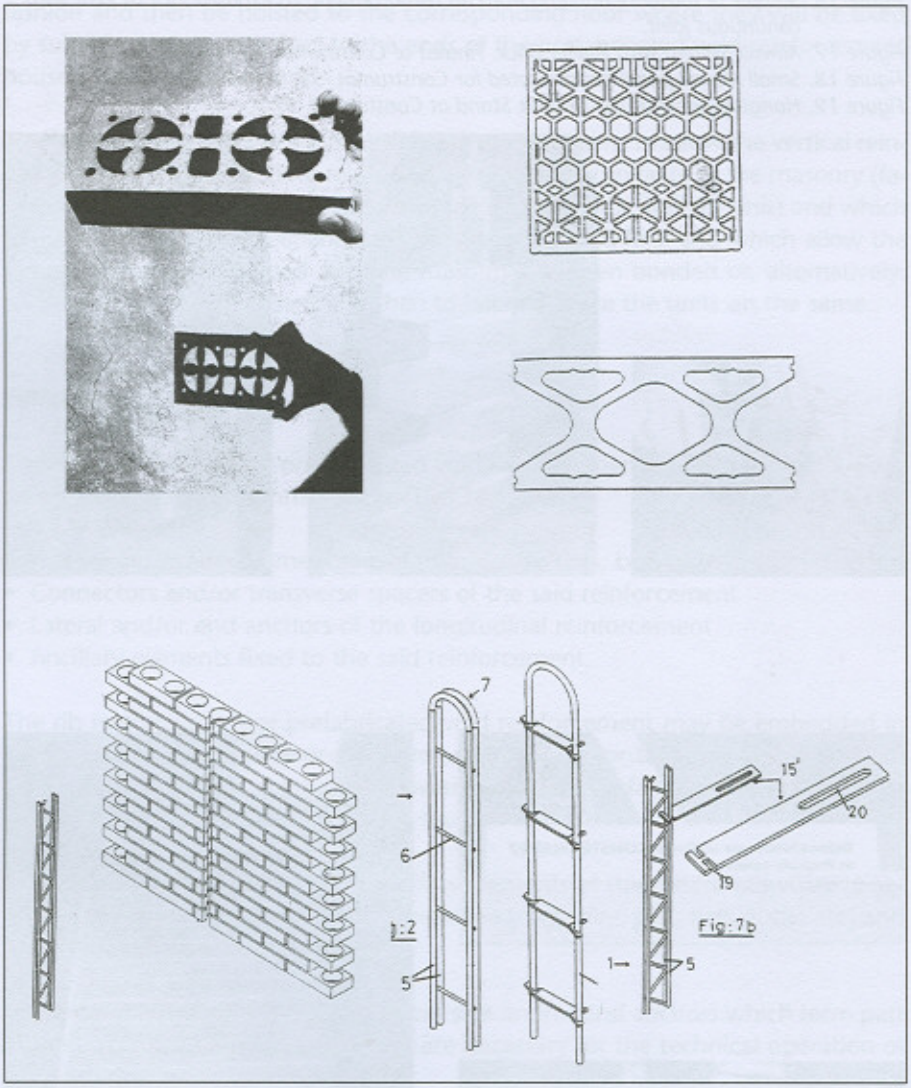

The prefabricated void reinforcement achieves various objectives at the same time: in addition to vertically reinforcing the wall the reinforcement provides the masonry with resisting ribs or supports which allow the anchorage of the wall to the structure at specific points and which may be built on site or prefabricated in order to serve as plates against wind action and only fastened at four points.

When combining the universal clay brick with the vertical reinforcing ribs it is possible to include a "support" within the masonry without having to change the specific qualities of the same, even when this requires a cavity with or without in-

Figure 15. Flower Brick set laterally against Allwall reinforcing rib.
Figure 16. Sample of masonry hanging from rib reinforcement, a) exposed face b) Rear with continuous joint.
Figure 17. Allwall System with Flower Brick. Finalist of Construmat '97 Awards.
Figure 18. Small Allwall panel prefabricated for Construmat '97.
Figure 19. Hanging panel at the Bekaert Stand at Construmat '97.

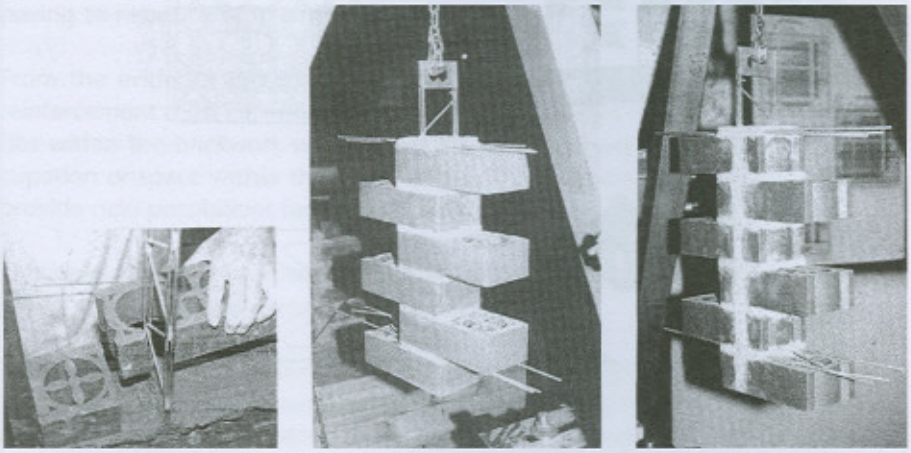

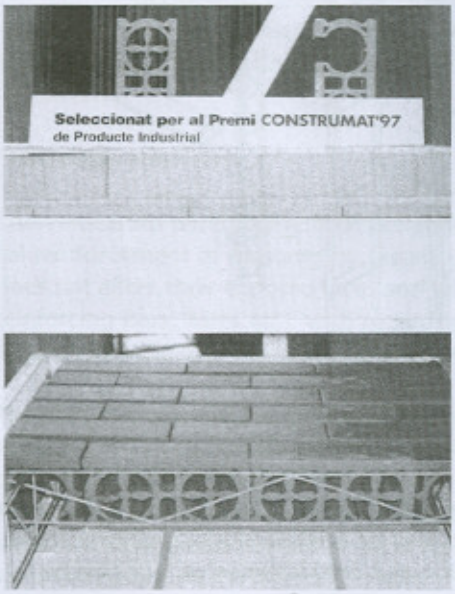

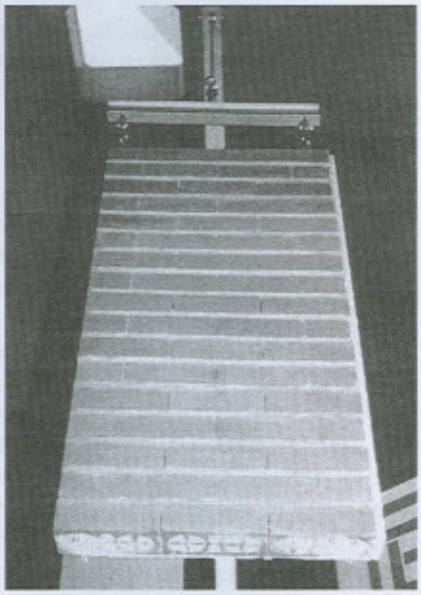

sulation, as the minimum thickness of the wire arrangement does not obstruct the cavity and, thereby, avoids the creation of thermal and moisture bridges.

When placing the vertical ribs in a wall which is also reinforced with truss-type bed joint reinforcement, this makes it possible to prefabricate the masonry on site or at a workshop, as the walls may be built in a horizontal, sloping or vertical fashion and then be hoisted to the corresponding floor where they will be fixed by suitable anchors attached to the ends of the prefabricated void reinforcement housed within the masonry.

The Integral Masonry System of Wall Reinforcement aims to allow the vertical reinforcement of walls by setting reinforcement close to both faces of the masonry (face and rear) and housing the same in voids set within the wall (or unit) and which are accessed by a lateral channel set on the unexposed face and which allow the reinforcement to be placed after the masonry has been bonded or, alternatively. to first set the reinforcement and then to laterally place the units on the same.

Characteristics

The rib reinforcement of prefabricated void reinforcement are formed by four different but interrelated components (Fig. 14)

- Longitudinal reinforcement formed by pairs of flats, bars, etc
- Connectors and/or transverse spacers of the said reinforcement
- Lateral and/or end anchors of the longitudinal reinforcement
- Ancillary elements fixed to the said reinforcement.

The rib reinforcement or prefabricated void reinforcement may be embedded in mortar (Fig. 15), concrete or adhesive or be partially or totally exposed to air (if inoxidizable), without any type of covering, and be prefabricated in any type of material and with any connection technique.

The manufacture of the ribs and ancillary elements of this patent may vary in accordance with the type of material employed (clay, wire, plat, flats, tube, etc) and its configuration.

ALLWALL SYSTEMS will include all those side and/or end anchors which form part of the void reinforcement and which are necessary for the technical operation of the system.

Advantages and Disadvantages

- Widening of the field of application of reinforced masonry towards that of prefabricated systems or towards masonry structures or enclosures independent of other framed structures.

- The ribs simplify the execution process of reinforced masonry and guarantee compliance with Design Theory once installed.
- The inherent advantages of opening up a new field of applications for reinforcement.
- The difficulty of introducing any new technique which is previously unknown, in spite of its ease of application
- The void ribs coordinated with universal units and masonry anchors ensure a safe assembly.

In CONSTRUMAT '97 an example of the Allwall System was exhibited at the Bekaert Stand in order to show the possibilities of prefabricated brick enclosure walls, and employing universal clay brick (Flower Brick), bed joint reinforcement (Murfor) and vertical reinforcement ribs (Allwall) (Figs. 16 to 19).

4. CONCLUSIONS

The universal unit allows the vertical reinforcement of the masonry in any area required.

The vertical rib is the perfect prefabricated reinforcement for the universal units.

The combination of the universal unit and vertical rib reinforcement together with the already known bed joint reinforcement, create a n integral masonry system which allow any type of reinforcing necessary though without undermining any of the traditional characteristics of unreinforced masonry.

5. BIBLIOGRAPHY

Adell, Josep M.ª. *La fábrica armada.* Ed. Munilla-Lería. Madrid 2000. ISBN 84-89150-39-7.

Adell, Josep M.ª. *Arquitectura sin fisuras.* Ed. Munilla-Lería. Madrid 2000. ISBN 84-89150-35-4.

Adell, Josep M.ª *La Fachada Contemporánea.* Ed. Munilla-Lería. Madrid 2000. (en edición).